OAG

OAG DYNAMIC FLIGHT STATUS

Outbound XML Schema Definition – Full Format

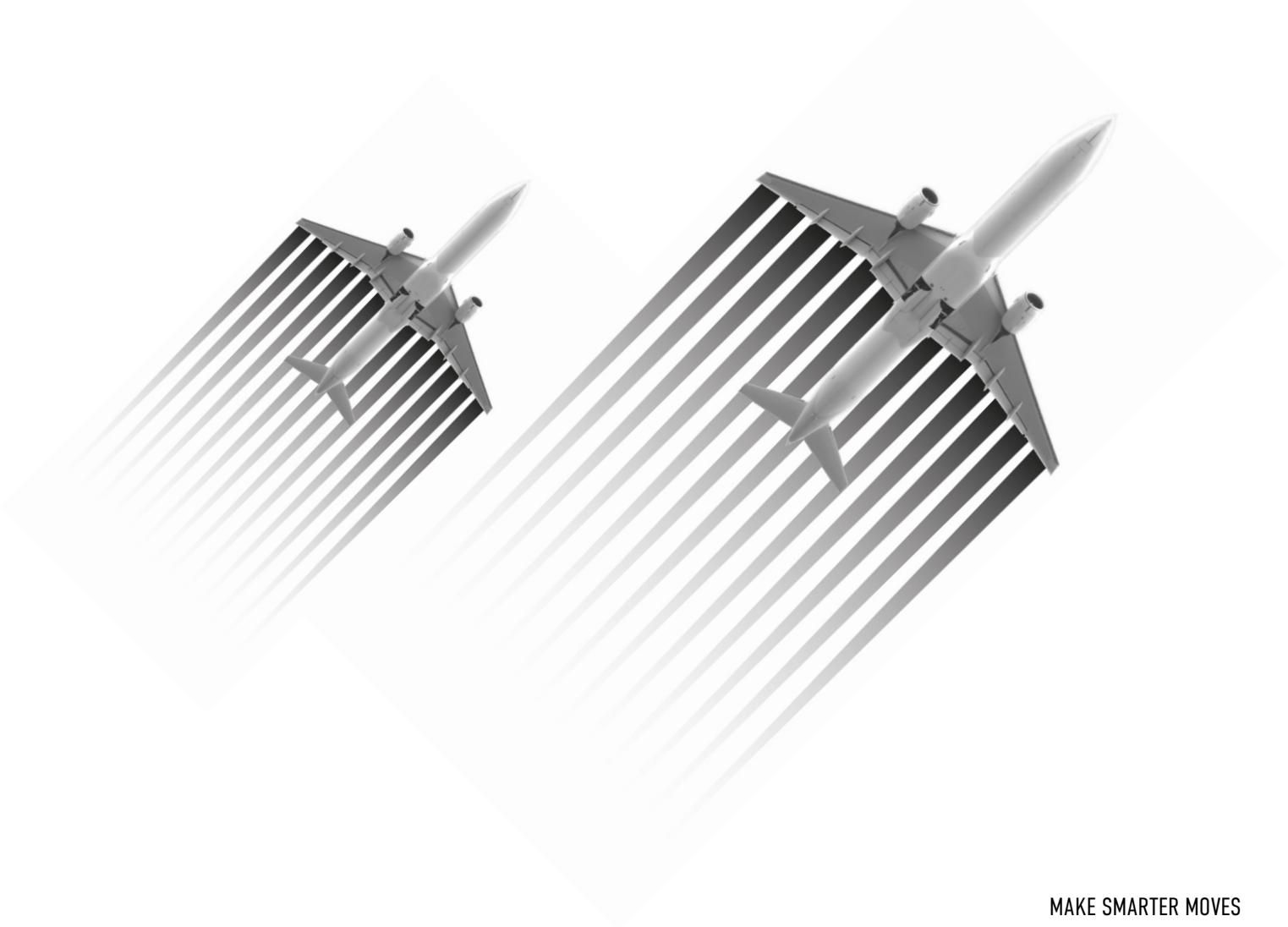

MAKE SMARTER MOVES

Table of Contents

Content	Page
1. Introduction	2
XML Schema and Dictionary	4
1.1 Diagram	4
1.2 Element and Attribute Definitions	6
1.2.1 element AcftReg	6
1.2.2 element Airbourne	7
1.2.3 element Apt	8
1.2.4 element Arrive	9
1.2.5 element BaggageClaim	11
1.2.6 element Carrier	12
1.2.7 element CarrierInfo	13
1.2.8 element Category	14
1.2.9 element Checkin	15
1.2.10 element City	16
1.2.11 element CodeShare	17
1.2.12 element DateTime	19
1.2.13 element Delay	20
1.2.14 element Depart	21
1.2.15 element Detail	23
1.2.16 element DivertApt	24
1.2.17 element DivertCity	25
1.2.18 element EquipInfo	26
1.2.19 element EquipType	27
1.2.20 element FIMSStatusResponse	28
1.2.21 element FlightDesign	29
1.2.22 element FlightInfo	30
1.2.23 element FlightStatus	31
1.2.24 element Gate	32
1.2.25 element Leg	33
1.2.26 element OffBlock	34
1.2.27 element OnBlock	35
1.2.28 element ServiceType	35
1.2.29 element Status	36
1.2.30 element Touchdown	37
1.2.31 element Trm	38
1.3 Fomatting	39
1.3.1 Date and Time	39
1.3.2 Change Indicators	39
1.3.3. Appearance of Schd, Act and Est	39
2 Appendix A: Status Code Descriptions	40
3 Appendix B: Service Type Codes	44
4. Appendix C: XML examples – Full Format	45
4.1 Appendix C-1: XML examples of flight status messages	45
4.2 Appendix C-2: XML examples of a base schedule message (without status updates)	47
4.3 Appendix C-3: XML examples of web service responses	48

1 Introduction

Flight Status

The OAG Flight Status Outbound XML Schema is designed by OAG for customers of OAG Flight Status (OFS*) to receive flight status information in a structured format. Flight status is issued for delays, cancellations, diversions, estimations on flight departures and arrivals, as well as advising terminal, gate and baggage claim and equipment information.

The schema incorporates the key data elements needed to advise all types of flight status updates.

This technical document describes the structure of the schema itself and provides dictionary definitions of the elements and attributes used. It also highlights essential changes to the schema resulting from OAG's drive to enhance this Flight Status product

OAG Profile-based "push" Service

OAG offers a push service for receiving status messages using this XML-Full format schema. Customer advises OAG in advance concerning the flights they are interested in (selection by carrier, carrier flight, airport pair, etc). These requests are held in the customers profile and OAG sends XML messages whenever a status update is received that matches the requests. If no status is received for a selected flight, no XML message will be delivered to the customer for that flight.

Base Schedules Option within the OAG Profile-based "push" Service

Effective from mid-July 2004, the OFS system also provides the option of delivering a set of base schedules each day for +2 days in the future. E.g. on 15th July, schedules for 17th July will be delivered. This enables the customer to have scheduled information for flights for each day. If status is not received for a flight, reference can be made to the scheduled details.

Base schedules are delivered using a similar XML schema as for status messages. However, minor changes were made to the original flight status schema to accommodate these new base schedules messages. The status XML messages have not been altered so customers who only receive status messages should not be affected by the schema changes. However, it is advisable to read the section on "Schema changes effective July 2004" carefully. The status XML message will validate against both the schema distributed in May 2004 and the revised schema distributed in July 2004. C*ustomers wishing to receive base schedules and flight status messages will need to adopt the revised schema.*

Schema Changes effective July 2004 to accommodate base schedules and web services

The schema changes are listed below:
Under element FIMSStatusResponse, the following changes have been made:

- *UTCSendDateTime* – has been changed to *optional*. This attribute provides the UTC date and time when a flight status or base schedule message has been "pushed" to the customer. It is not currently present in a web service response.
- *FeedSource* - new optional attribute for use only with the web service option
- *FeedStatus*- new optional attribute for use only with the web services option.

Under element FlightStatus, the attribute

- *LastUpdTran*- remains a required field but the contents vary depending upon whether the message contains base schedules, status updates, or is a web services response.
    - For status updates, delivered via the profile-based "push" service, the value in this attribute continues to reference the last transaction id (TransID) in a batch of flight status messages.
    - For base schedules, delivered via the profile-based "push" service, this attribute will be set to 0 (zero).
    - For web services responses (both status and schedules); this attribute will be set to 0 (zero).
- *LastUpdDateTime* – has been changed from required/dateTime to *optional string*.
    - For status messages, it remains in the dateTime format yyyy-mm-ddThh:mm:ss (e.g. "2001-06-20T19:51:0")
    - For base schedules delivered via the profile-based "push" service, this attribute will not be present.
    - For web services responses (both status and schedules), this attribute will be set to an empty string.

Under element FlightInfo, the attribute:

- *TransId* - is still required but has been changed to a string.
    - For status messages, the value held here will still be an integer (e.g. -2104475344).
    - For base schedule messages, it will contain a value allocated to the flight for that particular day. It includes a prefix of "S" indicating this is a base schedule. e.g. S27015817.
        - 1st position = S to indicate this is a base schedule
        - 2nd position = Day of week the first leg of a flight schedule is effective; 2=Tuesday
        - 3rd -9th position = sequential placement of a particular flight within the base schedules delivered for that day.

For more information on this option, please contact OAG Sales Representative.

Schema Changes effective December 2004 to hold Estimated Touchdown time
Under element Touchown, the attribute

- *Est*- has been added to hold the estimated touchdown time of a flight.
    - This is an *optional* attribute

Schema Changes effective September 2005 to hold Data Source
Under element Leg , the attribute

- *Datasource* has been added to hold the data source type : FAA or Non FAA.
    - This is an *optional* attribute

*OFS - formerly known as FIMS. Documentation may also contain references to previous FIMS name.

XML Schema and Dictionary

Schema Name: **FIMSStatusResponse.xsd**

1.1 Diagram

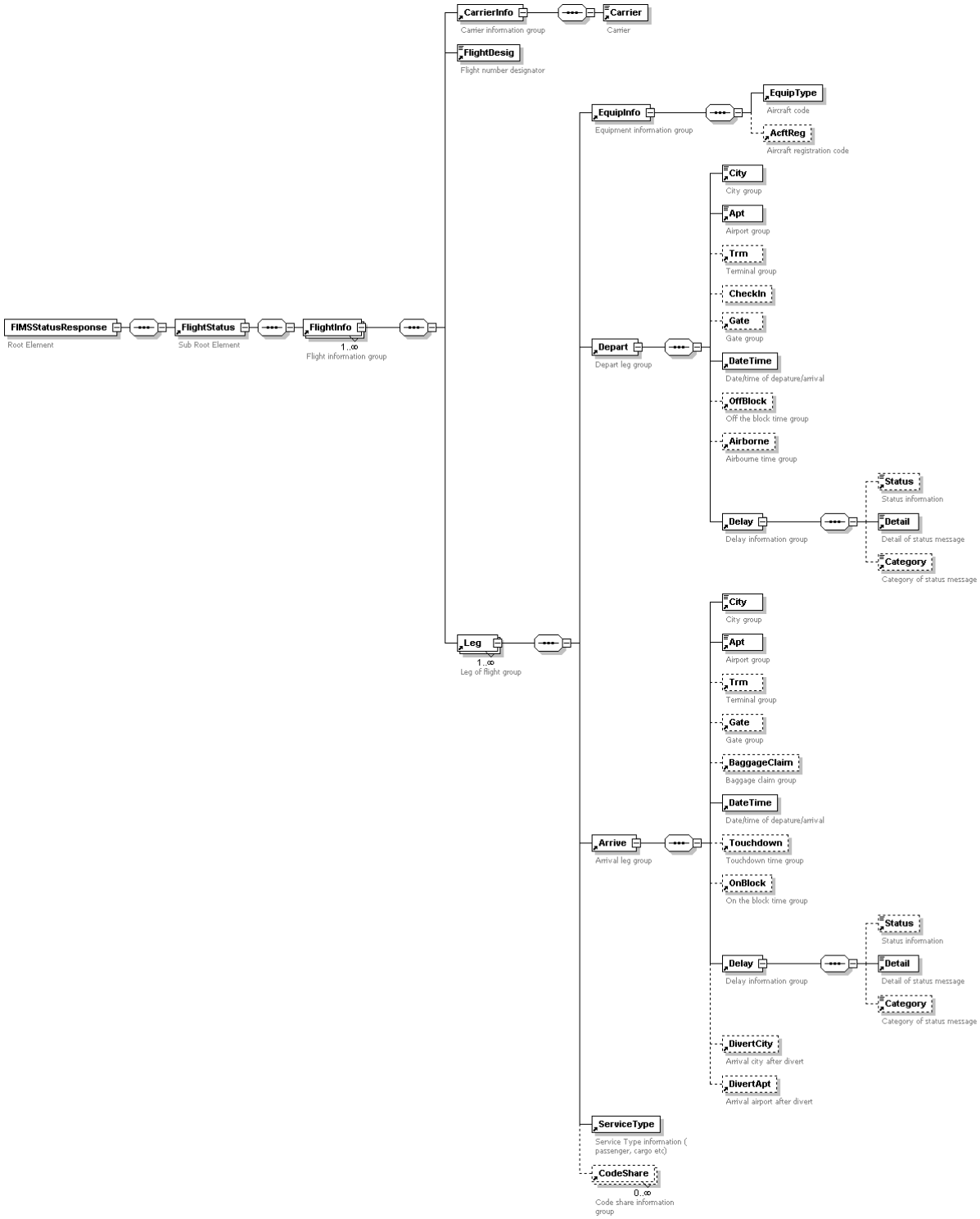

Generated with XMLSpy Schema Editor www.xmlspy.com

Please view the diagram above for the structure of the XML and click on an element in the element list below to see its definition. To navigate around the structure, click on the hyperlinks within each element.

Elements

AcftReg
Airborne
Apt
Arrive
BaggageClaim
Carrier
CarrierInfo
Category
CheckIn
City
CodeShare
DateTime
Delay
Depart
Detail
DivertApt
DivertCity
EquipInfo
EquipType
FIMSStatusResponse
FlightDesig
FlightInfo
FlightStatus
Gate
Leg
OffBlock
OnBlock
ServiceType
Status
Touchdown
Trm

1.2 Element and Attribute Definitions

1.2.1 element AcftReg

diagram

used by element **EquipInfo**

attributes

Name	Type	Use	Default	Fixed
Act	xs:string	optional		
Change	xs:string	optional		

annotation

documentation Aircraft registration code

Optional element giving the aircraft registration code, e.g., DABYD
OAG provides the data as supplied by the carrier.

source

```
<xs:element name="AcftReg">
  <xs:annotation>
    <xs:documentation>Aircraft registration code</xs:documentation>
  </xs:annotation>
  <xs:complexType>
    <xs:attribute name="Act" use="optional">
      <xs:simpleType>
        <xs:restriction base="xs:string">
          <xs:minLength value="2"/>
          <xs:maxLength value="10"/>
        </xs:restriction>
      </xs:simpleType>
    </xs:attribute>
    <xs:attribute name="Change" use="optional">
      <xs:simpleType>
        <xs:restriction base="xs:string">
          <xs:minLength value="1"/>
          <xs:maxLength value="1"/>
        </xs:restriction>
      </xs:simpleType>
```

1.2.2 element Airborne

diagram

used by element **Depart**

attributes

Name	Type	Use	Default	Fixed
Est	xs:dateTime	optional		
Act	xs:dateTime	optional		
Change	xs:string	optional		

annotation

documentation Airbourne time group

Take-Off date and time as estimated or actual attributes with change indicator.

source

```
<xs:element name="Airborne">
  <xs:annotation>
    <xs:documentation>Airbourne time group</xs:documentation>
  </xs:annotation>
  <xs:complexType>
    <xs:attribute name="Est" type="xs:dateTime" use="optional"/>
    <xs:attribute name="Act" type="xs:dateTime" use="optional"/>
    <xs:attribute name="Change" use="optional">
      <xs:simpleType>
        <xs:restriction base="xs:string">
          <xs:minLength value="1"/>
          <xs:maxLength value="1"/>
        </xs:restriction>
      </xs:simpleType>
    </xs:attribute>
  </xs:complexType>
</xs:element>
```

1.2.3 element Apt

diagram

type extension of **xs:string**

used by elements **Arrive** **Depart**

attributes

Name	Type	Use	Default	Fixed
AptCd	xs:string	required		

annotation

documentation Airport group

Airport element containing an IATA airport code attribute (AptCd) and text giving airport description.

source

```
<xs:element name="Apt">
  <xs:annotation>
    <xs:documentation>Airport group</xs:documentation>
  </xs:annotation>
  <xs:complexType>
    <xs:simpleContent>
      <xs:extension base="xs:string">
        <xs:attribute name="AptCd" use="required">
          <xs:simpleType>
            <xs:restriction base="xs:string">
              <xs:maxLength value="5"/>
              <xs:minLength value="3"/>
            </xs:restriction>
          </xs:simpleType>
        </xs:attribute>
      </xs:extension>
    </xs:simpleContent>
  </xs:complexType>
</xs:element>
```

1.2.4 element Arrive

diagram

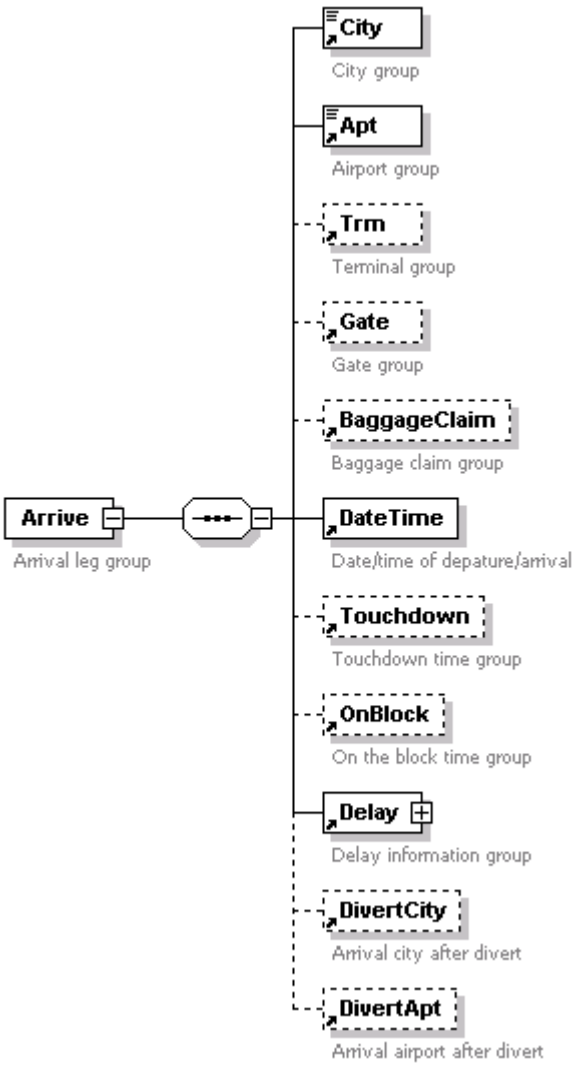

children **City** **Apt** **Trm** **Gate** **BaggageClaim** **DateTime** **Touchdown** **OnBlock** **Delay** **DivertCity** **DivertApt**

used by element **Leg**

annotation documentation Arrival leg group

Arrival information group containing required IATA City and Airport elements and required DateTime and Delay information elements plus other optional elements. Definitions of these can be found in their own dictionary entries.

source

```
<xs:element name="Arrive">
  <xs:annotation>
    <xs:documentation>Arrival leg group</xs:documentation>
  </xs:annotation>
  <xs:complexType>
    <xs:sequence>
      <xs:element ref="City"/>
      <xs:element ref="Apt"/>
      <xs:element ref="Trm" minOccurs="0"/>
      <xs:element ref="Gate" minOccurs="0"/>
      <xs:element ref="BaggageClaim" minOccurs="0"/>
      <xs:element ref="DateTime"/>
      <xs:element ref="Touchdown" minOccurs="0"/>
      <xs:element ref="OnBlock" minOccurs="0"/>
      <xs:element ref="Delay"/>
      <xs:element ref="DivertCity" minOccurs="0"/>
      <xs:element ref="DivertApt" minOccurs="0"/>
    </xs:sequence>
  </xs:complexType>
</xs:element>
```

1.2.5 element BaggageClaim

diagram

used by element **Arrive**

attributes

Name	Type	Use	Default	Fixed
Act	xs:string	optional		
Change	xs:string	optional		

annotation
documentation Baggage claim group

Baggage claim element containing actual attribute (only) with change indicator.

This element will be included ONLY if the carrier submits the information with flight status. OAG does not house baggage claim identifiers with a carrier's basic schedule information.

source

```
<xs:element name="BaggageClaim">
  <xs:annotation>
    <xs:documentation>Baggage claim group</xs:documentation>
  </xs:annotation>
  <xs:complexType>
    <xs:attribute name="Act" use="optional">
      <xs:simpleType>
        <xs:restriction base="xs:string">
          <xs:maxLength value="5"/>
          <xs:minLength value="1"/>
        </xs:restriction>
      </xs:simpleType>
    </xs:attribute>
    <xs:attribute name="Change" use="optional">
      <xs:simpleType>
        <xs:restriction base="xs:string">
          <xs:maxLength value="1"/>
          <xs:minLength value="1"/>
        </xs:restriction>
      </xs:simpleType>
    </xs:attribute>
  </xs:complexType>
</xs:element>
```

1.2.6 element Carrier

diagram

type extension of **xs:string**

used by element **CarrierInfo**

attributes

Name	Type	Use	Default	Fixed
CarrierCd	xs:string	required		

annotation

documentation Carrier

Carrier element containing an IATA carrier code attribute (CarrierCd) and text giving carrier description. ICAO carrier code may be provided in cases where IATA code is not known/available.

source

```
<xs:element name="Carrier">
  <xs:annotation>
    <xs:documentation>Carrier</xs:documentation>
  </xs:annotation>
  <xs:complexType>
    <xs:simpleContent>
      <xs:extension base="xs:string">
        <xs:attribute name="CarrierCd" use="required">
          <xs:simpleType>
            <xs:restriction base="xs:string">
              <xs:maxLength value="3"/>
              <xs:minLength value="2"/>
            </xs:restriction>
          </xs:simpleType>
        </xs:attribute>
      </xs:extension>
    </xs:simpleContent>
  </xs:complexType>
</xs:element>
```

1.2.7 element CarrierInfo

diagram

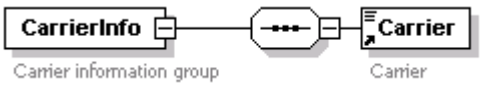

children **Carrier**

used by element **FlightInfo**

annotation documentation Carrier information group

Carrier information group element containing the carrier element.

source

```
<xs:element name="CarrierInfo">
  <xs:annotation>
    <xs:documentation>Carrier information group</xs:documentation>
  </xs:annotation>
  <xs:complexType>
    <xs:sequence>
      <xs:element ref="Carrier"/>
    </xs:sequence>
  </xs:complexType>
</xs:element>
```

1.2.8 element Category

diagram

type extension of **xs:string**

used by element **Delay**

attributes

Name	Type	Use	Default	Fixed
CatId	xs:string			

annotation documentation Category of status message

Optional element containing a reason category id attribute (CatId) with text description giving explanation of code – see Appendix A for details. Child of Delay element.

source

```
<xs:element name="Category">
  <xs:annotation>
    <xs:documentation>Category of status message</xs:documentation>
  </xs:annotation>
  <xs:complexType>
    <xs:simpleContent>
      <xs:extension base="xs:string">
        <xs:attribute name="CatId">
          <xs:simpleType>
            <xs:restriction base="xs:string">
              <xs:minLength value="1"/>
              <xs:maxLength value="10"/>
            </xs:restriction>
          </xs:simpleType>
        </xs:attribute>
      </xs:extension>
    </xs:simpleContent>
  </xs:complexType>
</xs:element>
```

1.2.9 element CheckIn

diagram

CheckIn

used by

element **Depart**

attributes

Name	Type	Use	Default	Fixed
Act	xs:string	optional		
Change	xs:string	optional		

annotation

documentation Check In Group

Check-in element giving actual check-in desk code with change indicator. This element will be included ONLY if the carrier submits the information with flight status. OAG does not house check-in identifiers with a carrier's basic schedule information.

source

```
<xs:element name="CheckIn" minOccurs="0">
  <xs:complexType>
    <xs:attribute name="Act" use="optional">
      <xs:simpleType>
        <xs:restriction base="xs:string">
          <xs:minLength value="1"/>
          <xs:maxLength value="5"/>
        </xs:restriction>
      </xs:simpleType>
    </xs:attribute>
    <xs:attribute name="Change" use="optional">
      <xs:simpleType>
        <xs:restriction base="xs:string">
          <xs:minLength value="1"/>
          <xs:maxLength value="1"/>
        </xs:restriction>
      </xs:simpleType>
    </xs:attribute>
  </xs:complexType>
</xs:element>
```

1.2.10 element City

diagram

type extension of **xs:string**

used by elements **Arrive** **Depart**

attributes

Name	Type	Use	Default	Fixed
CityCd	xs:string	required		

annotation

documentation City group

City element containing an IATA city code (CityCd) attribute and text giving city name. This is the city code associated with the applicable airport.

source

```
<xs:element name="City">
  <xs:annotation>
    <xs:documentation>City group</xs:documentation>
  </xs:annotation>
  <xs:complexType>
    <xs:simpleContent>
      <xs:extension base="xs:string">
        <xs:attribute name="CityCd" use="required">
          <xs:simpleType>
            <xs:restriction base="xs:string">
              <xs:maxLength value="5"/>
              <xs:minLength value="3"/>
            </xs:restriction>
          </xs:simpleType>
        </xs:attribute>
      </xs:extension>
    </xs:simpleContent>
  </xs:complexType>
</xs:element>
```

1.2.11 element CodeShare

diagram

used by element **Leg**

attributes

Name	Type	Use	Default	Fixed
Type	xs:int	required		
Seq	xs:int	required		
Desig	xs:string	optional		
FltNo	xs:string	optional		
DesigName	xs:string	optional		
MCD1	xs:string	optional		
MCD2	xs:string	optional		
MCD3	xs:string	optional		

annotation

documentation Code share information group

Code share element containing attributes that describe a code share, wet lease or joint operation situation – type (see below), designator with name, flight number, plus multiple carrier designator codes.

Code share types:

1	Operational Codeshare	-operational carrier and flight number provided if available
2	Type not in use	
3	Aircraft Owner	-IATA code of Aircraft Owner provided if available
4	Cockpit Crew Employer	-IATA code of Cockpit Crew Employer provided if available
5	Cabin Crew Employer	-IATA code of Cabin Crew Employer provided if available
6	Shared Airline Designator	-code share partner/operating carrier name information provided
7	MCD	-situation where carrier has Joint Operation agreement, IATA designators of carriers in the agreement will be provided

source

```
<xs:element name="CodeShare">
  <xs:annotation>
    <xs:documentation>Code share information group</xs:documentation>
  </xs:annotation>
  <xs:complexType>
    <xs:attribute name="Type" type="xs:int" use="required"/>
    <xs:attribute name="Seq" type="xs:int" use="required"/>
    <xs:attribute name="Desig" use="optional">
      <xs:simpleType>
        <xs:restriction base="xs:string">
          <xs:minLength value="2"/>
          <xs:maxLength value="3"/>
        </xs:restriction>
      </xs:simpleType>
    </xs:attribute>
    <xs:attribute name="FltNo" use="optional">
      <xs:simpleType>
        <xs:restriction base="xs:string">
          <xs:minLength value="1"/>
          <xs:maxLength value="5"/>
        </xs:restriction>
      </xs:simpleType>
    </xs:attribute>
    <xs:attribute name="DesigName" use="optional">
      <xs:simpleType>
        <xs:restriction base="xs:string">
          <xs:maxLength value="39"/>
        </xs:restriction>
      </xs:simpleType>
    </xs:attribute>
    <xs:attribute name="MCD1" use="optional">
      <xs:simpleType>
        <xs:restriction base="xs:string">
          <xs:minLength value="2"/>
          <xs:maxLength value="3"/>
        </xs:restriction>
      </xs:simpleType>
    </xs:attribute>
    <xs:attribute name="MCD2" use="optional">
      <xs:simpleType>
        <xs:restriction base="xs:string">
          <xs:minLength value="2"/>
          <xs:maxLength value="3"/>
        </xs:restriction>
      </xs:simpleType>
    </xs:attribute>
    <xs:attribute name="MCD3" use="optional">
      <xs:simpleType>
        <xs:restriction base="xs:string">
          <xs:minLength value="2"/>
          <xs:maxLength value="3"/>
        </xs:restriction>
      </xs:simpleType>
    </xs:attribute>
  </xs:complexType>
</xs:element>
```

1.2.12 element DateTime

diagram

used by

elements **Arrive** **Depart**

attributes

Name	Type	Use	Default	Fixed
Schd	xs:dateTime	optional		
Est	xs:dateTime	optional		
Act	xs:dateTime	optional		
Change	xs:string	optional		

annotation

documentation Date/time of depature/arrival

DateTime element with attributes giving scheduled (Schd), estimated (Est), actual (Act) date/time attributes and change indicator.

Schd = the 'scheduled' time provided by the airline to OAG and stored with the flight on the OAG schedule database.

Estimated and Actual will be included when updates to the flight are received via a carrier's status update.

source

```
<xs:element name="DateTime">
  <xs:annotation>
    <xs:documentation>Date/time of depature/arrival</xs:documentation>
  </xs:annotation>
  <xs:complexType>
    <xs:attribute name="Schd" type="xs:dateTime" use="optional"/>
    <xs:attribute name="Est" type="xs:dateTime" use="optional"/>
    <xs:attribute name="Act" type="xs:dateTime" use="optional"/>
    <xs:attribute name="Change" type="xs:string" use="optional"/>
  </xs:complexType>
</xs:element>
```

1.2.13 element Delay

diagram

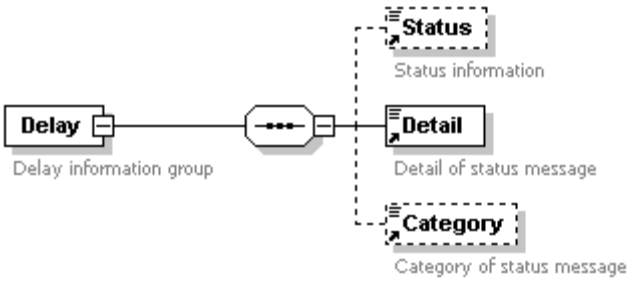

children **Status** **Detail** **Category**

used by elements **Arrive** **Depart**

annotation documentation Delay information group

Delay information group containing elements that describe the status of either a departing or arriving leg.

source

```
<xs:element name="Delay">
  <xs:annotation>
    <xs:documentation>Delay information group</xs:documentation>
  </xs:annotation>
  <xs:complexType>
    <xs:sequence>
      <xs:element ref="Status" minOccurs="0"/>
      <xs:element ref="Detail"/>
      <xs:element ref="Category" minOccurs="0"/>
    </xs:sequence>
  </xs:complexType>
</xs:element>
```

1.2.14 element Depart

diagram

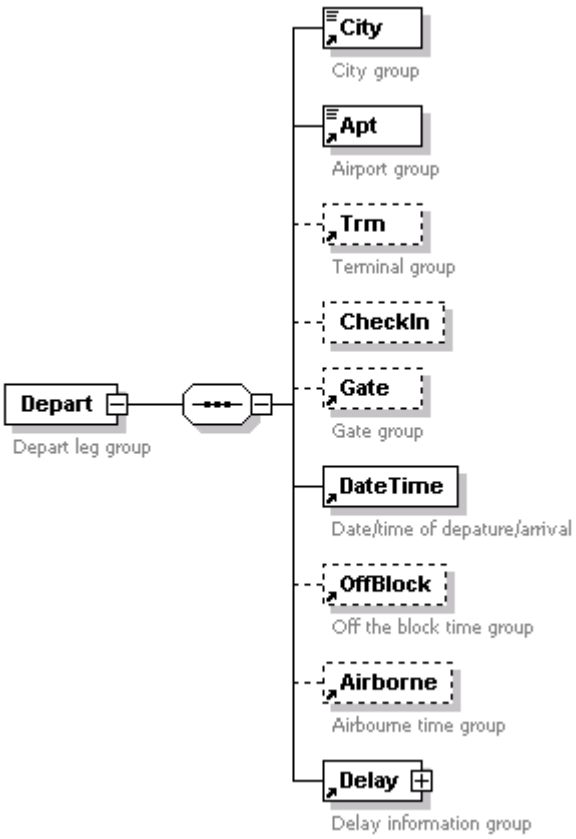

children **City** **Apt** **Trm** **CheckIn** **Gate** **DateTime** **OffBlock** **Airborne** **Delay**

used by element **Leg**

annotation documentation Depart leg group

Departure information group containing required IATA City and Airport elements and required DateTime and Delay information elements plus other optional elements. Definitions of these can be found in their own dictionary entries.

source

```
<xs:element name="Depart">
  <xs:annotation>
    <xs:documentation>Depart leg group</xs:documentation>
  </xs:annotation>
  <xs:complexType>
    <xs:sequence>
      <xs:element ref="City"/>
      <xs:element ref="Apt"/>
      <xs:element ref="Trm" minOccurs="0"/>
      <xs:element name="CheckIn" minOccurs="0">
        <xs:complexType>
          <xs:attribute name="Act" use="optional">
            <xs:simpleType>
              <xs:restriction base="xs:string">
                <xs:minLength value="1"/>
                <xs:maxLength value="5"/>
              </xs:restriction>
            </xs:simpleType>
          </xs:attribute>
          <xs:attribute name="Change" use="optional">
            <xs:simpleType>
              <xs:restriction base="xs:string">
                <xs:minLength value="1"/>
                <xs:maxLength value="1"/>
              </xs:restriction>
            </xs:simpleType>
          </xs:attribute>
        </xs:complexType>
      </xs:element>
      <xs:element ref="Gate" minOccurs="0"/>
      <xs:element ref="DateTime"/>
      <xs:element ref="OffBlock" minOccurs="0"/>
      <xs:element ref="Airborne" minOccurs="0"/>
      <xs:element ref="Delay"/>
    </xs:sequence>
  </xs:complexType>
</xs:element>
```

1.2.15 element Detail

diagram

type extension of **xs:string**

used by element **Delay**

attributes

Name	Type	Use	Default	Fixed
DetailCd	xs:string			

annotation

documentation Detail of status message

Detail element as a child of the delay element giving a detailed status code with a text description. See Appendix A for further details.

source

```
<xs:element name="Detail">
  <xs:annotation>
    <xs:documentation>Detail of status message</xs:documentation>
  </xs:annotation>
  <xs:complexType>
    <xs:simpleContent>
      <xs:extension base="xs:string">
        <xs:attribute name="DetailCd">
          <xs:simpleType>
            <xs:restriction base="xs:string">
              <xs:minLength value="1"/>
              <xs:maxLength value="5"/>
            </xs:restriction>
          </xs:simpleType>
        </xs:attribute>
      </xs:extension>
    </xs:simpleContent>
  </xs:complexType>
</xs:element>
```

1.2.16 element DivertApt

diagram

used by element **Arrive**

attributes

Name	Type	Use	Default	Fixed
AptCd	xs:string	required		

annotation

documentation Arrival airport after divert

Diverted airport element giving the IATA code (AptCd) attribute of the airport to which the flight has been diverted.

source

```
<xs:element name="DivertApt">
  <xs:annotation>
    <xs:documentation>Arrival airport after divert</xs:documentation>
  </xs:annotation>
  <xs:complexType>
    <xs:attribute name="AptCd" use="required">
      <xs:simpleType>
        <xs:restriction base="xs:string">
          <xs:minLength value="3"/>
          <xs:maxLength value="5"/>
        </xs:restriction>
      </xs:simpleType>
    </xs:attribute>
  </xs:complexType>
</xs:element>
```

1.2.17 element DivertCity

diagram

used by element **Arrive**

attributes

Name	Type	Use	Default	Fixed
CityCd	xs:string	required		

annotation

documentation Arrival city after divert

Diverted city element giving the IATA code (CityCd) attribute of the city to which the flight has been diverted. This is the city code associated with the applicable diverted airport.

source

```
<xs:element name="DivertCity">
  <xs:annotation>
    <xs:documentation>Arrival city after divert</xs:documentation>
  </xs:annotation>
  <xs:complexType>
    <xs:attribute name="CityCd" use="required">
      <xs:simpleType>
        <xs:restriction base="xs:string">
          <xs:minLength value="3"/>
          <xs:maxLength value="5"/>
        </xs:restriction>
      </xs:simpleType>
    </xs:attribute>
  </xs:complexType>
</xs:element>
```

1.2.18 element EquipInfo

diagram

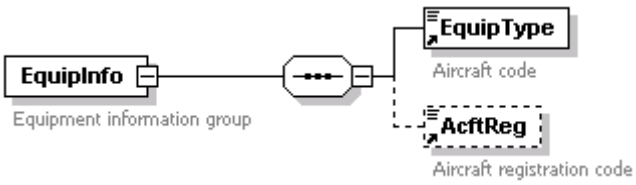

children **EquipType** **AcftReg**

used by element **Leg**

annotation documentation Equipment information group

Equipment information element containing child elements EquipType (mandatory) and AcftReg (optional).

source

```
<xs:element name="EquipInfo">
  <xs:annotation>
    <xs:documentation>Equipment information group</xs:documentation>
  </xs:annotation>
  <xs:complexType>
    <xs:sequence>
      <xs:element ref="EquipType"/>
      <xs:element ref="AcftReg" minOccurs="0"/>
    </xs:sequence>
  </xs:complexType>
</xs:element>
```

1.2.19 element EquipType

diagram

used by element **EquipInfo**

attributes

Name	Type	Use	Default	Fixed
Schd	xs:string	optional		
Act	xs:string	optional		
Change	xs:string	optional		

annotation documentation Aircraft code

Equipment type element containing the scheduled (Schd) and the actual (Act) IATA code of the aircraft flying the operation with change indicator.

source

```
<xs:element name="EquipType">
  <xs:annotation>
    <xs:documentation>Aircraft code</xs:documentation>
  </xs:annotation>
  <xs:complexType>
    <xs:attribute name="Schd" use="optional">
      <xs:simpleType>
        <xs:restriction base="xs:string">
          <xs:minLength value="3"/>
          <xs:maxLength value="5"/>
        </xs:restriction>
      </xs:simpleType>
    </xs:attribute>
    <xs:attribute name="Act" use="optional">
      <xs:simpleType>
        <xs:restriction base="xs:string">
          <xs:minLength value="3"/>
          <xs:maxLength value="5"/>
        </xs:restriction>
      </xs:simpleType>
    </xs:attribute>
    <xs:attribute name="Change" use="optional">
      <xs:simpleType>
        <xs:restriction base="xs:string">
          <xs:minLength value="1"/>
          <xs:maxLength value="1"/>
        </xs:restriction>
      </xs:simpleType>
    </xs:attribute>
```

1.2.20 element FIMSStatusResponse

diagram

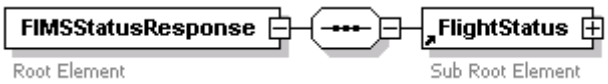

children **FlightStatus**

attributes

Name	Type	Use	Default	Fixed
SendDateTime	xs:dateTime	required		
UTCSendDateTime	xs:dateTime	optional		
FeedSource	xs:string	optional		
FeedStatus	xs:string	optional		

annotation

documentation Root Element

Root (header) element of the full outbound XML schema. Contains sub root header element FlightStatus and the send date and time of the message.

SendDateTime Date and time message is sent and is always provided in the local time of the operating system sending the message

UTCSendDateTime Represents the UTC (GMT) equivalent of the SendDateTime attribute.

Only valid for Status and Base Schedule Messages.

For Web Services: this attribute will not be present.

FeedSource indicates whether a web service request has been made for “Schedule”, “Status” o r “StatusSchedule” (Status and Schedules).

Only valid for Web Services.

For Flight Status and Base Schedules: this attribute will not be present.

FeedStatus Indicates whether the Request has been appropriately populated. Eg. “OK”, “Interrupted”.

Only valid for Web Services.

For Flight Status and Base Schedules: this attribute will not be present.

source

```
<xs:element name="FIMSStatusResponse">
  <xs:annotation>
    <xs:documentation>Root Element</xs:documentation>
  </xs:annotation>
  <xs:complexType>
    <xs:sequence>
      <xs:element ref="FlightStatus"/>
    </xs:sequence>
    <xs:attribute name="SendDateTime" type="xs:dateTime" use="required"/>
    <xs:attribute name="UTCSendDateTime" type="xs:dateTime" use="optional"/>
    <xs:attribute name="FeedSource" type="xs:string" use="optional"/>
    <xs:attribute name="FeedStatus" type="xs:string" use="optional"/>
  </xs:complexType>
</xs:element>
```

1.2.21 element FlightDesig

diagram

type restriction of **xs:string**

used by element **FlightInfo**

facets minLength 3
maxLength 8

annotation documentation Flight number designator

Flight number designator element that contains the IATA carrier code and the flight number, e.g., AA3776, AA003, AA012, AA234.

source

```
<xs:element name="FlightDesig">
  <xs:annotation>
    <xs:documentation>Flight number designator</xs:documentation>
  </xs:annotation>
  <xs:simpleType>
    <xs:restriction base="xs:string">
      <xs:maxLength value="8"/>
      <xs:minLength value="3"/>
    </xs:restriction>
  </xs:simpleType>
</xs:element>
```

1.2.22 element FlightInfo

diagram

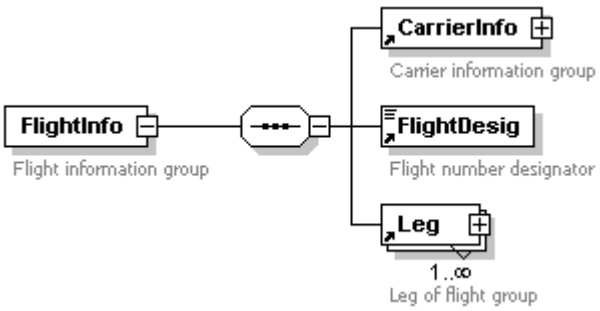

children **CarrierInfo** **FlightDesig** **Leg**

used by element **FlightStatus**

attributes

Name	Type	Use	Default	Fixed
TransId	xs:string	required		

annotation documentation Flight information group

Flight information group that will occur 1 or many times depending on the number of unique flight status changes during a given extract interval.

This element contains the transaction id (TransId) attribute:

For Status messages: the TransId is the original number that is allocated to the change when it is received by OAG's collection system.

For Base Schedules messages: the TransId is a value allocated to the flight for that particular day. It Includes a prefix of 'S' indicating this is a base schedule.
Example: S27015817.
1st position = S to indicate this is a base schedule
2nd position = Day of week the 1st leg of the flight schedule is effective; 2=Tuesday
3rd h-9th position = sequential placement of this particular flight within the base schedules delivered for that particular

For Web Service messages: The TransId is the same as for Base Schedule Messages. The base schedule information Is returned when no status has been received for the requested flight.

source

```
<xs:element name="FlightInfo">
  <xs:annotation>
    <xs:documentation>Flight information group</xs:documentation>
  </xs:annotation>
  <xs:complexType>
    <xs:sequence>
      <xs:element ref="CarrierInfo"/>
      <xs:element ref="FlightDesig"/>
      <xs:element ref="Leg" maxOccurs="unbounded"/>
    </xs:sequence>
    <xs:attribute name="TransId" type="xs:string" use="required"/>
  </xs:complexType>
</xs:element>
```

1.2.23 element FlightStatus

diagram

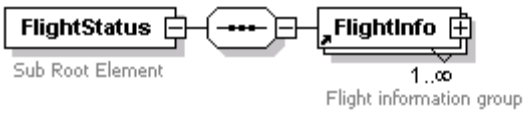

children **FlightInfo**

used by element **FIMSStatusResponse**

attributes

Name	Type	Use	Default	Fixed
LastUpdTran	xs:int	required		
LastUpdDateTime	xs:string	optional		
UTCLOCInd	xs:string	required		

annotation documentation Sub Root Element

A sub header element off the root which contains 1 or many FlightInfo elements. It also contains the following attributes:

LastUpdTran For Status Messages: this value will be the last transaction id in the batch.

For Base Schedule Messages: this value will be set to 0 (zero)

For Web Service responses (both status and schedules): this value will be set to 0

LastUpdDateTime For Status Messages: this value will be the date/time of last flight in the batch. This field is always provided in the local time of the operating system storing these updates.

For Base Schedule Messages: this attribute will not be present.

For Web Services responses: this attribute will be set to an empty string “”.

UTCLOCInd Identifies whether the date/times are provided in ‘local’ (LOC) or ‘Co-ordinated Universal Time’ (UTC).

source

```
<xs:element name="FlightStatus">
  <xs:annotation>
    <xs:documentation>Sub Root Element</xs:documentation>
  </xs:annotation>
  <xs:complexType>
    <xs:sequence>
      <xs:element ref="FlightInfo" maxOccurs="unbounded"/>
    </xs:sequence>
    <xs:attribute name="LastUpdTran" type="xs:int" use="required"/>
    <xs:attribute name="LastUpdDateTime" type="xs:string" use="optional"/>
    <xs:attribute name="UTCLOCInd" use=" required">
      <xs:simpleType>
        <xs:restriction base="xs:string">
          <xs:minLength value="3"/>
          <xs:maxLength value="3"/>
          <xs:enumeration value="UTC"/>
          <xs:enumeration value="LOC"/>
        </xs:restriction>
      </xs:simpleType>
    </xs:attribute>
  </xs:complexType>
</xs:element>
```

1.2.24 element Gate

diagram

used by

elements **Arrive** **Depart**

attributes

Name	Type	Use	Default	Fixed
Act	xs:string	optional		
Change	xs:string	optional		

annotation

documentation Gate group

Gate element containing actual attribute (only) with change indicator.

This element will be included ONLY if the carrier submits the information with flight status. OAG does not house gate identifiers with a carrier's basic schedule information.

source

```
<xs:element name="Gate">
  <xs:annotation>
    <xs:documentation>Gate group</xs:documentation>
  </xs:annotation>
  <xs:complexType>
    <xs:attribute name="Act" use="optional">
      <xs:simpleType>
        <xs:restriction base="xs:string">
          <xs:maxLength value="5"/>
          <xs:minLength value="1"/>
        </xs:restriction>
      </xs:simpleType>
    </xs:attribute>
    <xs:attribute name="Change" use="optional">
      <xs:simpleType>
        <xs:restriction base="xs:string">
          <xs:minLength value="1"/>
          <xs:maxLength value="1"/>
        </xs:restriction>
      </xs:simpleType>
    </xs:attribute>
  </xs:complexType>
</xs:element>
```

1.2.25 element Leg

diagram

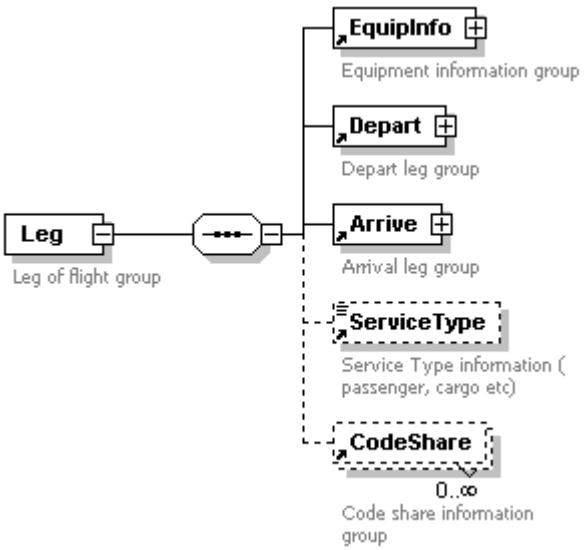

children **EquipInfo** **Depart** **Arrive** **CodeShare** **ServiceType**

used by element **FlightInfo**

attributes

Name	Type	Use	Default	Fixed
Datasource	Xs string	optional		

annotation

documentation Leg of flight group

Leg element which represents a leg of a flight and contains departure and arrival elements with equipment information and optional code share data.

source

```
<xs:element name="Leg">
  <xs:annotation>
    <xs:documentation>Leg of flight group</xs:documentation>
  </xs:annotation>
  <xs:complexType>
    <xs:attribute name="Datasource" type="xs:string" use="optional"/>
    <xs:sequence>
      <xs:element ref="EquipInfo"/>
      <xs:element ref="Depart"/>
      <xs:element ref="Arrive"/>
      <xs:element ref="ServiceType" minOccurs="0"/>
      <xs:element ref="CodeShare" minOccurs="0" maxOccurs="unbounded"/>
    </xs:sequence>
  </xs:complexType>
</xs:element>
```

1.2.26 element OffBlock

diagram

used by element **Depart**

attributes

Name	Type	Use	Default	Fixed
Est	xs:dateTime	optional		
Act	xs:dateTime	optional		
Change	xs:string	optional		

annotation
documentation Off the block time group

Off block date/time element containing estimated and actual attributes with change indicator.

source

```
<xs:element name="OffBlock">
  <xs:annotation>
    <xs:documentation>Off the block time group</xs:documentation>
  </xs:annotation>
  <xs:complexType>
    <xs:attribute name="Est" type="xs:dateTime" use="optional"/>
    <xs:attribute name="Act" type="xs:dateTime" use="optional"/>
    <xs:attribute name="Change" use="optional">
      <xs:simpleType>
        <xs:restriction base="xs:string">
          <xs:minLength value="1"/>
          <xs:maxLength value="1"/>
        </xs:restriction>
      </xs:simpleType>
    </xs:attribute>
  </xs:complexType>
</xs:element>
```

1.2.27 element OnBlock

diagram

OnBlock

On the block time group

used by

element **Arrive**

attributes

Name	Type	Use	Default	Fixed
Est	xs:dateTime	optional		
Act	xs:dateTime	optional		
Change	xs:string	optional		

annotation

documentation On the block time group

On block date/time element containing estimated and actual attributes with change indicator.

source

```
<xs:element name="OnBlock">
  <xs:annotation>
    <xs:documentation>On the block time group</xs:documentation>
  </xs:annotation>
  <xs:complexType>
    <xs:attribute name="Est" type="xs:dateTime" use="optional"/>
    <xs:attribute name="Act" type="xs:dateTime" use="optional"/>
    <xs:attribute name="Change" use="optional">
      <xs:simpleType>
        <xs:restriction base="xs:string">
          <xs:minLength value="1"/>
          <xs:maxLength value="1"/>
        </xs:restriction>
      </xs:simpleType>
    </xs:attribute>
  </xs:complexType>
</xs:element>
```

1.2.28 element ServiceType

diagram

ServiceType

Service Type information (passenger, cargo etc)

used by

element **Leg**

attributes

Name	Type	Use	Default	Fixed
SvcTypeCd	xs:string	required		

annotation

documentation Service Type information (passenger, cargo etc)

Service Type element containing the IATA service type codes and their meaning. This code identifies the type of service for a particular leg of a flight.

This element was added in Release 1.21. See Appendix B for details.

source

```
<<xs:element name="ServiceType">
  <xs:annotation>
    <xs:documentation>Service Type information ( passenger, cargo etc)</xs:documentation>
  </xs:annotation>
  <xs:complexType>
    <xs:simpleContent>
      <xs:extension base="xs:string">
        <xs:attribute name="SvcTypeCd" type="xs:string" use="required"/>
      </xs:extension>
    </xs:simpleContent>
  </xs:complexType>
</xs:element>
```

1.2.29 element Status

diagram

type extension of **xs:string**

used by element **Delay**

attributes

Name	Type	Use	Default	Fixed
StatusCd	xs:string			

annotation documentation Status information

Status element as child of the Delay element containing short status code (StatusCd) attribute with text description. See appendix A for details.

source

```
<xs:element name="Status">
  <xs:annotation>
    <xs:documentation>Status information</xs:documentation>
  </xs:annotation>
  <xs:complexType>
    <xs:simpleContent>
      <xs:extension base="xs:string">
        <xs:attribute name="StatusCd">
          <xs:simpleType>
            <xs:restriction base="xs:string">
              <xs:minLength value="1"/>
              <xs:maxLength value="3"/>
            </xs:restriction>
          </xs:simpleType>
        </xs:attribute>
      </xs:extension>
    </xs:simpleContent>
  </xs:complexType>
</xs:element>
```

1.2.30 element Touchdown

diagram

used by element **Arrive**

attributes

Name	Type	Use	Default	Fixed
Act	xs:dateTime	optional		
Change	xs:string	optional		
Est	xs:dateTime	optional		

annotation
documentation Touchdown time group

Touchdown date/time element containing estimated and actual attributes with change indicator.

source

```
<xs:element name="Touchdown">
  <xs:annotation>
    <xs:documentation>Touchdown time group</xs:documentation>
  </xs:annotation>
  <xs:complexType>
    <xs:attribute name="Est" type="xs:dateTime" use="optional"/>
    <xs:attribute name="Act" type="xs:dateTime" use="optional"/>
    <xs:attribute name="Change" use="optional">
      <xs:simpleType>
        <xs:restriction base="xs:string">
          <xs:minLength value="1"/>
          <xs:maxLength value="1"/>
        </xs:restriction>
      </xs:simpleType>
    </xs:attribute>
  </xs:complexType>
</xs:element>
```

1.2.31 element Trm

diagram

used by elements **Arrive** **Depart**

attributes

Name	Type	Use	Default	Fixed
Schd	xs:string	optional		
Act	xs:string	optional		
Change	xs:string	optional		

annotation documentation Terminal group

Terminal element containing scheduled and actual attributes with change indicator.

Schd If the airport is a terminal designated airport, the terminal ID held on OAG schedule database for this arrive/ depart airport will appear in the field.

Act This will contain a terminal ID if it is submitted by the carrier with their flight status updates. Otherwise this attribute will not appear.

source

```
<xs:element name="Trm">
  <xs:annotation>
    <xs:documentation>Terminal group</xs:documentation>
  </xs:annotation>
  <xs:complexType>
    <xs:attribute name="Schd" use="optional">
      <xs:simpleType>
        <xs:restriction base="xs:string">
          <xs:maxLength value="39"/>
          <xs:minLength value="1"/>
        </xs:restriction>
      </xs:simpleType>
    </xs:attribute>
    <xs:attribute name="Act" use="optional">
      <xs:simpleType>
        <xs:restriction base="xs:string">
          <xs:maxLength value="39"/>
          <xs:minLength value="1"/>
        </xs:restriction>
      </xs:simpleType>
    </xs:attribute>
    <xs:attribute name="Change" use="optional">
      <xs:simpleType>
        <xs:restriction base="xs:string">
          <xs:minLength value="1"/>
          <xs:maxLength value="1"/>
        </xs:restriction>
      </xs:simpleType>
    </xs:attribute>
  </xs:complexType>
</xs:element>
```

1.3 Formatting

1.3.1 Date and Time

All DateTime fields use the following ISO format:

CCYY-MM-DDTHH:MM:SS

Example 1:

"1 minute past midnight on January 18th, 2002"
= DateTime field: 2002-01-18T00:01:00

Example 2:

"23 minutes past 8 in the evening on February 2nd, 2002"
= DateTime field: 2002-01-02T20:23:00

1.3.2 Change Indicators

Within the XML schema change indicators for an element will be shown using the attribute:

Change="Y" or Change="N"

The following rules determine the setting of this attribute:

- The change attribute will be set to "Y" the first time an update is received for an actual (Act) or estimated (Est) attribute of an element and any subsequent changes to these attributes.
- If a change attribute for an element was previously set to "Y" and a new change has been received but does not concern this element then the change indicator will be reset to "N". Thus, for a single flight status message the change indicator attribute for an element will only indicate a change that occurred during a single status collection transaction.
- If a value is received for a 'time' element, e.g., actual departure time, and it is the same as its scheduled value then the element will not be marked as a change and the indicator will remain as "N". However, a status message will be sent IF the customer has delay tolerance set to zero.
- If a value is received for an element, e.g., actual departure time, and it is different from a previously received value for that element but it is the same as the original scheduled value then the element will be marked as a change and the indicator will be set to "Y". A change transaction message will be triggered in this case.

1.3.3 Appearance of Schd, Act and Est

The appearance of a scheduled attribute (schd) in the XML for a given element will only be produced if OAG holds the information on the central OAG Schedule Database.

The appearance of an actual (Act) or estimated (Est) attribute for a given element will only be produced if a carrier provides the information to the OAG status collection system, otherwise these attributes will not be provided in the XML.

2 Appendix A: Status Code Descriptions

Stat – Status Code:
<space><space> - no status available
CX cancelled
DY delayed
EY early
OT on time
NS no status derivable

Note: Status Code updates to be provided by OAG. To ensure most current list check with OAG.

Det – Status Detail:
ARVS No delays posted
CNCL Cancelled flight
CXCL Cancelled
DCSN Check with airline
DPTS No delays posted
ETA Estimated time of arrival
ETD Estimated time of departure
IN Arrived in the gate
LX Cancelled leg
NA Not Available
NO No-op
OFF Departed off the ground
ON Arrived on the ground
OUT Departed out of the gate
PRE Preliminary estimated time
RFA Return from Airborne
RTR Return to Ramp
SCHD Schedule Change

Note: Status Detail Code updates to be provided by OAG. To ensure most current list is provided, check with OAG.

Cat ID – Reason Category:

Cat ID	Reason Category
1	Airline internal
2	Airline internal
3	Airline Controlled Delay
4	Downline Delay
5	Other
6	None
9	SCHEDULED GROUND TIME LESS THAN DECLARED MINIMUM GROUND TIME
11	LATE CHECK-IN acceptance after deadline
12	LATE CHECK-IN, congestion in check-in area
13	CHECK-IN ERROR, congestion in check-in area
14	OVERSALES booking errors

15	BOARDING discrepancies and paging missing checked-in passenger
16	COMMERCIAL PUBLICITY/PASSENGER CONVENIENCE, VIP, press, ground meals and missing personal items
17	CATERING ORDER late or incorrect order given to supplier
18	BAGGAGE PROCESSING sorting etc.
21	DOCUMENTATION errors etc
22	LATE POSITIONING
23	LATE ACCEPTANCE
24	INADEQUATE PACKING
25	OVERSALES booking errors
26	LATE PREPARATION IN WAREHOUSE
27	DOCUMENTATION PACKING etc
28	LATE POSITIONING
29	LATE ACCEPTANCE
31	AIRCRAFT DOCUMENTATION LATE/INACCURATE weight and balance general declaration pax manifest etc
32	LOADING/UNLOADING bulky special load cabin load lack of loading staff
33	LOADING EQUIPMENT lack of or breakdown e.g. container pallet loader lack of staff
34	SERVICING EQUIPMENT lack of or breakdown lack of staff e.g. steps
35	AIRCRAFT CLEANING
36	FUELLING/DEFUELLING fuel supplier
37	CATERING late delivery or loading
38	ULD lack of or serviceability
39	TECHNICAL EQUIPMENT lack of or breakdown lack of staff e.g. push-back
41	AIRCRAFT DEFECTS
42	SCHEDULED MAINTENANCE late release
43	NON-SCHEDULED
44	SPARES AND MAINTENANCE
45	AOG SPARES to be carried to another station
46	AIRCRAFT CHANGE for technical reasons
47	STANDBY AIRCRAFT lack of planned standby aircraft for technical reasons
48	SCHEDULED CABIN CONFIGURATION/VERSION ADJUSTMENTS
51	DAMAGE DURING FLIGHT OPERATIONS, bird or lightning strike, turbulence, heavy or overweight landing, collision during taxiing
52	DAMAGE DURING GROUND OPERATIONS, collisions (other than during taxiing), loading/off-loading damage, contamination, towing, extreme weather conditions
55	DEPARTURE CONTROL
56	CARGO PREPARATION
57	FLIGHT PLANS
61	FLIGHT PLAN late completion or change of flight documentation

62	OPERATIONAL REQUIREMENTS fuel load alteration
63	LATE CREW PROCEDURES other than connection and standby (flight deck or entire crew)
64	FLIGHT DESK CREW SHORTAGE, sickness, awaiting standby, flight time limitations, crew meals, valid visa, health documents, etc
65	FLIGHT DECK CREW SPECIAL REQUEST not within operational requirements
66	LATE CABIN CREW BOARDING OR DEPARTURE PROCEDURES other than connection and standby
67	CABIN CREW SHORTAGE, sickness, awaiting standby, flight time limitations, crew meals, valid visa, health documents, etc
68	CABIN CREW ERROR OR SPECIAL REQUEST not within operational requirements
69	CAPTAIN REQUEST FOR SECURITY CHECK extraordinary
71	DEPARTURE STATION
72	DESTINATION STATION
73	EN ROUTE OR ALTERNATE
75	DE-ICING OF AIRCRAFT. Removal of ice and/or snow frost prevention equipment
76	REMOVAL OF SNOW ICE WATER AND SAND FROM AIRPORT
77	GROUND HANDLING IMPAIRED BY ADVERSE WEATHER CONDITIONS
81	ATFM DUE TO ATC EN-ROUTE DEMAND/CAPACITY standard demand/capacity problems
82	ATFM DUE TO ATC STAFF / EQUIPMENT EN-ROUTE, reduced capacity caused by industrial action or staff shortage or equipment failure, extraordinary demand due to capacity reduction in neighbouring area
83	ATFM DUE TO RESTRICTION AT DESTINATION AIRPORT, airport and/or runway closed due to obstruction, industrial action, staff shortage, political unrest, noise abatement, night curfew, special flights
84	ATFM DUE TO WEATHER AT DESTINATION
85	MANDATORY SECURITY
86	IMMIGRATION CUSTOMS HEALTH
87	AIRPORT FACILITIES, parking stands, ramp congestion, lighting, buildings, gate limitations, etc
88	RESTRICTIONS AT AIRPORT OF DESTINATION, airport and/or runway closed due to obstruction, industrial action, staff shortage, political unrest, noise abatement, night curfew, special flights
89	,RESTRICTIONS AT AIRPORT OF DEPARTURE WITH OR WITHOUT ATFM RESTRICTIONS, incl. Air Traf. Svcs, startup/pushbk, apt and/or runwy closed due to obstruction/weather, industl. actn, staff shortage, political unrest, noise abatement, night curfew, special flts
91	LOAD CONNECTION awaiting load from another flight
92	THROUGH CHECK-IN ERROR passenger and baggage
93	AIRCRAFT ROTATION late arrival of aircraft from another flight or previous sector
94	CABIN CREW ROTATION awaiting cabin crew from another flight

95	CREW ROTATION awaiting crew from another flight (flight desk or entire crew)
96	OPERATIONAL CONTROL rerouting diversion consolidation aircraft change for reason other than technical
97	INDUSTRIAL ACTION WITH OWN AIRLINE
98	INDUSTRIAL ACTION OUTSIDE OWN AIRLINE excluding A.T.S.
99	This code shall be used only when it is clear that a reason cannot be matched to a code above (explain in SI section)

Note: Reason Category Code updates to be provided by OAG. To ensure most current list is provided, check with OAG.

3 Appendix B: Service Type Codes

A	Cargo/Mail – Additional flights
B	Passenger – Additional flights, Shuttle Mode
F	Cargo/Mail – Loose loaded cargo and /or preloaded devices
G	Passenger –Additional flights, Normal service
J	Passenger – Normal Service
M	Cargo/Mail – Mail Only
Q	Passenger/Cargo in cabin
R	Passenger/Cargo Additional flights
S	Passenger – Shuttle Mode
U	Passenger – Operated by surface vehicle

4 Appendix C: XML Examples – Full Format

4.1 Appendix C-1: XML examples of flight status updates

Example 1: This example shows all status elements and attributes in use when a status change is delivered by the profile-based push system. It does not constitute a real life example.


```xml
<FIMSStatusResponse SendDateTime="2001-06-20T19:51:05" UTCSendDateTime="2001-06-20T18:51:05">
    <FlightStatus LastUpdTran="-10284576" LastUpdDateTime="2001-06-20T19:51:04" UTCLOCInd="LOC">
        <FlightInfo TransId="1234567">
            <CarrierInfo>
                <Carrier CarrierCd="UA">United Airlines</Carrier>
            </CarrierInfo>
            <FlightDesig>UA1419</FlightDesig>
            <Leg Datasource="FAA">
                <EquipInfo>
                    <EquipType Schd="763" Act="747" Change="N"/>
                    <AcftReg Act="DABYD" Change="Y"/>
                </EquipInfo>
                <Depart>
                    <City CityCd="CHI">Chicago</City>
                    <Apt AptCd="ORD">O'Hare International Airport</Apt>
                    <Trm Schd="1" Act="1" Change="N"/>
                    <CheckIn Act="12" Change="N"/>
                    <Gate Act="14B" Change="Y"/>
                    <DateTime Schd="2001-06-20T11:35:00" Est="2001-06-20T11:45:00" Act="2001-06-20T11:47:00" Change="Y"/>
                    <OffBlock Est="2001-06-20T11:30:00" Act="2001-06-20T11:33:00" Change="Y"/>
                    <Airborne Est="2001-06-20T11:35:00" Act="2001-06-20T11:47:00" Change="Y"/>
                    <Delay>
                        <Status StatusCd="DY">Delay</Status>
                        <Detail DetailCd="OFF">Departed off the ground</Detail>
                        <Category CatId="3">Airline Controlled Delay</Category>
                    </Delay>
                </Depart>
                <Arrive>
                    <City CityCd="BOS">Boston</City>
                    <Apt AptCd="BOS">Logan International Airport</Apt>
                    <Trm Schd="B" Act="C" Change="Y"/>
                    <Gate Act="12" Change="N"/>
                    <BaggageClaim Act="18" Change="N"/>
                    <DateTime Schd="2001-06-20T13:45:00" Est="2001-06-20T13:45:00" Act="2001-06-20T13:38:00" Change="Y"/>
                    <Touchdown Est="2001-06-20T13:35:00" Act="2001-06-20T13:38:00" Change="Y"/>
                    <OnBlock Est="2001-06-20T13:50:00" Act="2001-06-20T13:43:00" Change="Y"/>
                    <Delay>
                        <Status StatusCd="EY">Early</Status>
                        <Detail DetailCd="IN">Arrived in at gate</Detail>
                        <Category CatId="6">None</Category>
                    </Delay>
                    <DivertCity CityCd=" NYC"/>
                    <DivertApt AptCd=" JFK"/>
                </Arrive>
                <ServiceType SvcTypeCd="J">Passenger - Normal Service</ServiceType>
                <CodeShare Type="1" Seq="1" Desig="AC" FltNo="1119" DesigName="Air Canada"/>
                <CodeShare Type="6" Seq="2" Desig="AC" DesigName="Air Canada"/>
            </Leg>
        </FlightInfo>
    </FlightStatus>
</FIMSStatusResponse>
```


Example 2: The following example is a set of real flight schedules with status change


```xml
<?xml version="1.0"?>
<FIMSStatusResponse SendDateTime="2004-05-17T00:00:13" UTCSendDateTime="2004-05-16T23:00:13">
    <FlightStatus LastUpdTran="-2104475344" LastUpdDateTime="2004-05-17T00:00:02" UTCLOCInd="LOC">
        <FlightInfo TransId="-2104475344">
            <CarrierInfo>
```

```
            <Carrier CarrierCd="AS">Alaska Airlines</Carrier>
        </CarrierInfo>
        <FlightDesig>AS4230</FlightDesig>
        <Leg>
            <EquipInfo>
                <EquipType Schd="ERD" Change="N"/>
            </EquipInfo>
            <Depart>
                <City CityCd="TOL">Toledo</City>
                <Apt AptCd="TOL">Toledo Express Apt</Apt>
                <Gate Act="6" Change="N"/>
                <DateTime Schd="2004-05-16T17:41:00" Act="2004-05-16T17:38:00" Change="N"/>
                <OffBlock Act="2004-05-16T17:38:00" Change="N"/>
                <Airborne Act="2004-05-16T17:45:00" Change="N"/>
                <Delay>
                    <Status StatusCd="EY">Early</Status>
                    <Detail DetailCd="OFF">Departed off the ground</Detail>
                    <Category CatId="6">None</Category>
                </Delay>
            </Depart>
            <Arrive>
                <City CityCd="CHI">Chicago</City>
                <Apt AptCd="ORD">Chicago O'Hare International Apt</Apt>
                <Trm Schd="3" Change="N"/>
                <Gate Act="G17" Change="N"/>
                <BaggageClaim Act="9" Change="N"/>
                <DateTime Schd="2004-05-16T17:46:00" Est="2004-05-16T17:46:00" Act="2004-05-16T17:31:00" Change="Y"/>
                <OnBlock Act="2004-05-16T17:31:00" Change="Y"/>
                <Delay>
                    <Status StatusCd="EY">Early</Status>
                    <Detail DetailCd="IN">Arrived in the gate</Detail>
                    <Category CatId="6">None</Category>
                </Delay>
            </Arrive>
            <ServiceType SvcTypeCd="J">Passenger - Normal Service</ServiceType>
            <CodeShare Type="1" Seq="1" Desig="AA" FltNo="4340" DesigName="American Airlines"/>
            <CodeShare Type="3" Seq="2" Desig="AA" DesigName="American Airlines"/>
            <CodeShare Type="6" Seq="3" DesigName="American Eagle"/>
        </Leg>
    </FlightInfo>
  </FlightStatus>
</FIMSStatusResponse>
```

4.2 Appendix C-2: XML example of a base schedule message (without status updates)

This example has been selected because it shows all elements and attributes in use. It is a real flight schedule.


```xml
<?xml version="1.0"?>
<FIMSStatusResponse SendDateTime="2004-06-08T09:59:39" UTCSendDateTime="2004-06-08T08:59:39" >
    <FlightStatus LastUpdTran="0" UTCLOCInd="LOC">
        <FlightInfo TransId="S27015817">
            <CarrierInfo>
                <Carrier CarrierCd="BA">British Airways</Carrier>
            </CarrierInfo>
            <FlightDesig>BA1643</FlightDesig>
            <Leg
                <EquipInfo>
                    <EquipType Schd="AR1"/>
                </EquipInfo>
                <Depart>
                    <City CityCd="MAD">Madrid</City>
                    <Apt AptCd="MAD">Madrid Barajas Apt</Apt>
                    <Trm Schd="1"/>
                    <DateTime Schd="2004-06-08T20:30:00"/>
                    <Delay>
                        <Detail DetailCd="DPTS">No delays posted</Detail>
                        <Category CatId="6">None</Category>
                    </Delay>
                </Depart>
                <Arrive>
                    <City CityCd="MAN">Manchester</City>
                    <Apt AptCd="MAN">Manchester International Apt</Apt>
                    <Trm Schd="3"/>
                    <DateTime Schd="2004-06-08T22:25:00"/>
                    <Delay>
                        <Detail DetailCd="ARVS">No delays posted</Detail>
                        <Category CatId="6">None</Category>
                    </Delay>
                </Arrive>
                <ServiceType SvcTypeCd="J">Passenger - Normal Service</ServiceType>
                <CodeShare Type="3" Seq="1" Desig="TH" DesigName="British Airways Citiexpress"/>
                <CodeShare Type="4" Seq="2" Desig="TH" DesigName="British Airways Citiexpress"/>
                <CodeShare Type="5" Seq="3" Desig="BA" DesigName="British Airways"/>
                <CodeShare Type="6" Seq="4" Desig="TH" DesigName="British Airways Citiexpress"/>
            </Leg>
        </FlightInfo>
    </FlightStatus>
</FIMSStatusResponse>
```

4.3 Appendix C-3: XML examples of web service responses

Web services

Example 1: Web service response for airport pair status.

This request was for airport pair LGW-EWR. When status for an airport pair is requested, the FeedSource always = StatusSchedule. For this situation, status could be returned from some flights while only schedule information is returned for others. This response shows status for CO019 and VS3119 (code share with CO019).


```xml
<FIMSStatusResponse SendDateTime="2004-06-07T09:49:52" FeedStatus="ok" FeedSource="StatusSchedule">
    <FlightStatus LastUpdTran="0" LastUpdDateTime="" UTCLOCInd="LOC">
        <FlightInfo TransId="-2129201895">
            <CarrierInfo>
                <Carrier CarrierCd="CO">Continental Airlines</Carrier>
            </CarrierInfo>
            <FlightDesig>CO019</FlightDesig>
            <Leg Datasource="FAA">
                <EquipInfo>
                    <EquipType Schd="777" Change="N"/>
                </EquipInfo>
                <Depart>
                    <City CityCd="LON">London</City>
                    <Apt AptCd="LGW">London Gatwick Apt</Apt>
                    <Trm Schd="S" Change="N"/>
                    <Gate Act="17" Change="Y"/>
                    <DateTime Schd="2004-06-07T10:30:00" Est="2004-06-07T10:30:00" Change="N"/>
                    <Delay>
                        <Status StatusCd="OT">On Time</Status>
                        <Detail DetailCd="DPTS">No delays posted</Detail>
                        <Category CatId="6">None</Category>
                    </Delay>
                </Depart>
                <Arrive>
                    <City CityCd="NYC">New York</City>
                    <Apt AptCd="EWR">Newark Liberty International Apt</Apt>
                    <Trm Schd="C" Change="N"/>
                    <Gate Act="C136" Change="Y"/>
                    <DateTime Schd="2004-06-07T13:20:00" Est="2004-06-07T14:13:00" Change="Y"/>
                    <Delay>
                        <Status StatusCd="DY">Delayed</Status>
                        <Detail DetailCd="ETA">Estimated time of arrival</Detail>
                        <Category CatId="6">None</Category>
                    </Delay>
                </Arrive>
                <ServiceType SvcTypeCd="J">Passenger - Normal Service</ServiceType>
            </Leg>
        </FlightInfo>
        <FlightInfo TransId="-2129201894">
            <CarrierInfo>
                <Carrier CarrierCd="VS">Virgin Atlantic Airways</Carrier>
            </CarrierInfo>
            <FlightDesig>VS3119</FlightDesig>
            <Leg>
                <EquipInfo>
                    <EquipType Schd="777" Change="N"/>
                </EquipInfo>
                <Depart>
                    <City CityCd="LON">London</City>
                    <Apt AptCd="LGW">London Gatwick Apt</Apt>
                    <Trm Schd="S" Change="N"/>
                    <Gate Act="17" Change="Y"/>
                    <DateTime Schd="2004-06-07T10:30:00" Est="2004-06-07T10:30:00" Change="N"/>
                    <Delay>
                        <Status StatusCd="OT">On Time</Status>
```

```
                <Detail DetailCd="DPTS">No delays posted</Detail>
                <Category CatId="6">None</Category>
            </Delay>
        </Depart>
        <Arrive>
            <City CityCd="NYC">New York</City>
            <Apt AptCd="EWR">Newark Liberty International Apt</Apt>
            <Trm Schd="C" Change="N"/>
            <Gate Act="C136" Change="Y"/>
            <DateTime Schd="2004-06-07T13:20:00" Est="2004-06-07T14:13:00" Change="Y"/>
            <Delay>
                <Status StatusCd="DY">Delayed</Status>
                <Detail DetailCd="ETA">Estimated time of arrival</Detail>
                <Category CatId="6">None</Category>
            </Delay>
        </Arrive>
        <ServiceType SvcTypeCd="J">Passenger - Normal Service</ServiceType>
        <CodeShare Type="1" Seq="1" Desig="CO" FltNo="019" DesigName="Continental Airlines"/>
        <CodeShare Type="3" Seq="2" Desig="CO" DesigName="Continental Airlines"/>
        <CodeShare Type="4" Seq="3" Desig="CO" DesigName="Continental Airlines"/>
        <CodeShare Type="5" Seq="4" Desig="CO" DesigName="Continental Airlines"/>
        <CodeShare Type="6" Seq="5" Desig="CO" DesigName="Continental Airlines"/>
    </Leg>
  </FlightInfo>
 </FlightStatus>
</FIMSStatusResponse>
```


Example 2: Web service response for Flight Number request where schedules are returned.

This request was for Flight AA005. As status update has not yet been received for this flight, the base schedule is returned. Therefore the FeedSource = Schedule.


```
<FIMSStatusResponse SendDateTime="2004-07-08T04:19:33" FeedStatus="ok" FeedSource="Schedule"
xmlns:xsi="http://www.w3.org/2001/XMLSchema-instance"
xsi:noNamespaceSchemaLocation="D:\Vss\FIMS\XMLSchema\Outbound\FIMSStatusResponseFull.xsd">
    <FlightStatus LastUpdTran="0" LastUpdDateTime="" UTCLOCInd="LOC">
        <FlightInfo TransId="S42000005">
            <CarrierInfo>
                <Carrier CarrierCd="AA">American Airlines</Carrier>
            </CarrierInfo>
            <FlightDesig>AA005</FlightDesig>
            <Leg>
                <EquipInfo>
                    <EquipType Schd="763"/>
                </EquipInfo>
                <Depart>
                    <City CityCd="DFW">Dallas/Fort Worth</City>
                    <Apt AptCd="DFW">Dallas/Fort Worth Intl Apt</Apt>
                    <Trm Schd="A"/>
                    <DateTime Schd="2004-07-08T10:05:00"/>
                    <Delay>
                        <Detail DetailCd="DPTS">No Delays Posted</Detail>
                        <Category CatId="6">None</Category>
                    </Delay>
                </Depart>
                <Arrive>
                    <City CityCd="HNL">Honolulu</City>
                    <Apt AptCd="HNL">Honolulu International Apt</Apt>
                    <Trm Schd="M"/>
                    <DateTime Schd="2004-07-08T13:13:00"/>
                    <Delay>
                        <Detail DetailCd="ARVS">No Delays Posted</Detail>
                        <Category CatId="6">None</Category>
                    </Delay>
                </Arrive>
                <ServiceType SvcTypeCd="J">Passenger - Normal Service</ServiceType>
```

```
            </Leg>
        </FlightInfo>
    </FlightStatus>
</FIMSStatusResponse>
```


Example 3: Web service response for Flight Number request where status updates are available

This request was for Flight AA005 with FeedSource = Status.


```
<FIMSStatusResponse SendDateTime="2004-06-07T09:37:37" FeedStatus="ok" FeedSource="Status">
    <FlightStatus LastUpdTran="0" LastUpdDateTime="2004-06-07T07:34:24" UTCLOCInd="LOC">
        <FlightInfo TransId="-2129186917">
            <CarrierInfo>
                <Carrier CarrierCd="AA">American Airlines</Carrier>
            </CarrierInfo>
            <FlightDesig>AA005</FlightDesig>
            <Leg>
                <EquipInfo>
                    <EquipType Schd="763" Change="N"/>
                </EquipInfo>
                <Depart>
                    <City CityCd="DFW">Dallas/Fort Worth</City>
                    <Apt AptCd="DFW">Dallas/Fort Worth Intl Apt</Apt>
                    <Trm Schd="A" Change="N"/>
                    <Gate Act="A29" Change="Y"/>
                    <DateTime Schd="2004-06-07T10:05:00" Change="N"/>
                    <Delay>
                        <Detail DetailCd="DPTS">No delays posted</Detail>
                        <Category CatId="6">None</Category>
                    </Delay>
                </Depart>
                <Arrive>
                    <City CityCd="HNL">Honolulu</City>
                    <Apt AptCd="HNL">Honolulu International Apt</Apt>
                    <Trm Schd="M" Change="N"/>
                    <Gate Act="18" Change="Y"/>
                    <BaggageClaim Act="F2" Change="Y"/>
                    <DateTime Schd="2004-06-07T13:24:00" Change="N"/>
                    <Delay>
                        <Detail DetailCd="ARVS">No delays posted</Detail>
                        <Category CatId="6">None</Category>
                    </Delay>
                </Arrive>
                <ServiceType SvcTypeCd="J">Passenger - Normal Service</ServiceType>
            </Leg>
        </FlightInfo>
    </FlightStatus>
</FIMSStatusResponse>
```